Kentucky Department of
EDUCATION

2027 Kentucky School Bus Purchasing Guide



Kentucky Department of
EDUCATION

2027 IC Bus School Bus Purchase Authorization

The _____Board of Education, located in _____Kentucky, on the _____day of _____, 20_____, in a legally called and constituted meeting, voted to purchase school buses through the Commonwealth of Kentucky contract price procedure.

This Board of Education took this official action to authorize the Chief State School Officer to procure 2026 school buses. This action, as spread upon the minutes of the meeting of this Board of Education on the above date, should be construed as evidence of obligation of this Board of Education to purchase the above school buses through the Commonwealth of Kentucky contract agreements established in accordance with statutory authority.

Signed

_____, Secretary
_____, Superintendent
of the _____Board of Education
On the _____day of _____, 20_____.

BODY SIDE NUMBERS: Indicate the body side number the Board of Education wants painted on the side of the body of each school bus. Match body side number to individual item numbers. Example: Item 1 - Side number - 5, 6, 7, 8

_____
_____
_____
_____
_____

Current lead times for bus completion is 270 days.

Kentucky School Buses
2027 Bus Purchasing Guide

Instructions: Please number items in numerical order that coincide with the floor plans. Include an "O" for the optional items. You may add or delete rows as needed for each section. Sample numbering started below and can be updated as items are added or removed.

All Type A are Hydraulic Brakes and have a left side center fuel tank. All Type C have Center Rear fuel tanks.

Item #	Quantity	Bus Type	Capacity	Engine Manufacturer	Chassis Manufacturer	HP	Transmission Manufacturer	Wheel Base	Rear Axle Overhang	Base Price	Surcharge Price	Total Price
IC-01		C	**14** (34 shell)	Cummins	Internationa	220	Allison 2500PTS	170	93	$ 151,199	$ 4,460	$ 155,659
IC-02		C	**20** (52 shell)	Cummins	Internationa	220	Allison 2500PTS	218	127	$ 156,199	$ 4,460	$ 160,659
IC-03		C	**20** (52 shell)	Cummins	Internationa	250	Allison 2500PTS	218	127	$ 157,200	$ 4,460	$ 161,660
IC-04		C	**30** (66 shell)	Cummins	Internationa	220	Allison 2500PTS	276	140	$ 162,699	$ 4,460	$ 167,159
IC-05		C	**30** (66 shell)	Cummins	Internationa	250	Allison 2500PTS	276	140	$ 163,700	$ 4,460	$ 168,160
IC-06		C	**30** (66 shell)	Cummins	Internationa	220	Allison 3000PTS	276	140	$ 167,599	$ 4,460	$ 172,059
IC-07		C	**30** (66 shell)	Cummins	Internationa	250	Allison 3000PTS	276	140	$ 168,600	$ 4,460	$ 173,060

Please Note: ALL DIESEL school bus prices include a $4,460.00 emissions surcharge (shown in Surcharge Price Column).

Type A/C – Diesel (Type A diesel has a left side middle fuel tank. All others have center rear fuel tank.)

Item #	Quantity	Bus Type	Capacity	Engine Manufacturer	Chassis Manufacturer	HP	Transmission Manufacturer	Wheel Base	Rear Axle Overhang	Base Price	Surcharge Price (Maximum)	Total Price
IC-08		C	34	Cummins	Internationa	220	Allison 2500PTS	170	93	$ 142,699	$ 4,460	**$ 147,159.00**
IC-09		C	52	Cummins	Internationa	220	Allison 2500PTS	218	127	$ 146,299	$ 4,460	**$ 150,759.00**
IC-10		C	52	Cummins	Internationa	250	Allison 2500PTS	218	127	$ 147,300	$ 4,460	**$ 151,760.00**
IC-11		C	66	Cummins	Internationa	220	Allison 2500PTS	276	140	$ 150,899	$ 4,460	**$ 155,359.00**
IC-12		C	66	Cummins	Internationa	250	Allison 2500PTS	276	140	$ 151,900	$ 4,460	**$ 156,360.00**
IC-13		C	72	Cummins	Internationa	220	Allison 2500PTS	276	158	$ 151,699	$ 4,460	**$ 156,159.00**
IC-14		C	72	Cummins	Internationa	250	Allison 2500PTS	276	158	$ 152,700	$ 4,460	**$ 157,160.00**
IC-15		C	66	Cummins	Internationa	220	Allison 3000PTS	276	140	$ 156,899	$ 4,460	**$ 161,359.00**
IC-16		C	66	Cummins	Internationa	250	Allison 3000PTS	276	140	$ 157,900	$ 4,460	**$ 162,360.00**
IC-17		C	72	Cummins	Internationa	220	Allison 3000PTS	276	158	$ 158,099	$ 4,460	**$ 162,559.00**
IC-18		C	72	Cummins	Internationa	250	Allison 3000PTS	276	158	$ 159,100	$ 4,460	**$ 163,560.00**

Please Note: ALL DIESEL school bus prices include $4,460.00 emissions surcharge (shown in Surcharge Price Column).

BLUEGRASS INTERNATIONAL
TRUCK • BUS • RV

Type A/C Electric

Item #	Quantity	Bus Type	Capacity	Engine Manufacturer	Chassis Manufacturer	HP	Transmission Manufacturer	Wheel Base	Rear Axle Overhang	Base Price	Surcharge Price	Total Price
IC-19		C	52	255 KW	Internationa	342	210	218	127	$416,899	0	**$416,899**
IC-20		C	72	255 KW	Internationa	342	210	276	158	$422,599	0	**$422,599**

OPTIONS

RADIO

Option Number	Bus Type Available	Option Type	Extended Description	Price
ICO-01	C-34/52 pass	Radio	AM/FM/P.A. with four interior speakers and outside speaker	$ 522.00
ICO-02	C -66/72 pass	Radio	AM/FM/P.A. with eight interior speakers and outside speaker	$ 591.00

CAMERA'S

Option Number	Bus Type Available	Option Type	Extended Description	Price
ICO-03	C	Video System	Seon DH6H500G 6 channel video system with 1 camera head and 500 GB hard drive	$ 2,736.00
ICO-04	C	Video System	Seon Stop Arm Camera (installed with system above)	$ 637.00
ICO-05	C	Video System	Seon Additional camera head (installed with system above)	$ 482.00
ICO-06	C	Video System	Seon Pedestal for Forward facing (windshield) camera	$ 134.00
ICO-07	C	Video System	Seon Sensor Harness, Event Marker, GPS Antenna	$ 345.00
ICO-08	C	Video System	Seon DH8H1T0 - M 8 channel video system with 1 camera head and 1 TB hard drive	$ 3,466.00
ICO-09	C	Video System	Seon Wi-Fi Antenna for video download	$ 268.00
ICO-10	C	Video System	REI HD6 6 channel video system with 1 camera head and 500 GB hard drive	$ 2,705.00
ICO-11	C	Video System	REI Additional camera head (installed with system above)	$ 363.00
ICO-12	C	Video System	REI Event Marker installed with a new video system	$ 161.00
ICO-13	C	Video System	REI Sensor Harness installed with a new video system	$ 225.00
ICO-14	C	Video System	REI - Add Stop Arm camera to a new HD6 video system with 4 camera heads	$ 776.00

BLUEGRASS INTERNATIONAL
TRUCK • BUS • RV

CAMERA'S (Continued)				
ICO-16	C	Video System	REI HD5 12 channel video system with 1 camera head and 500 GB hard drive	$ 3,588.00
ICO-17	C	Video System	REI Pedestal mount for forward-facing (windshield) camera	$ 134.00

LUGGAGE - Luggage Boxes will be limited to RH side with Air Conditioning and availability will be limited on Special Needs buses due to wheelchair track!

Option Number	Bus Type Available	Option Type	Extended Description	Price
ICO-18	C - 52 PASS	Luggage	Left Center 91" x 24" x 18" (47EVB)	$ 1,430.00
ICO-19	C - 52 PASS	Luggage	Right Center 66" x 24" x 18" (47ESX)	$ 1,178.00
ICO-20	C - 66 PASS	Luggage	Left Center 114" x 24" x 18" (47EVT)	$ 1,575.00

LUGGAGE - Luggage Boxes will be limited to RH side with Air Conditioning and availability will be limited on Special Needs buses due to wheelchair track!

ICO-21	C - 66 PASS	Luggage	Right Center 114" x 24" x 18" (47EVV)	$ 1,575.00
ICO-22	C - 66 PASS	Luggage	Right Rear 36" x 20" x 18" (47GAG)	$ 771.00
ICO-23	C - 72 PASS	Luggage	Left Center 114" x 24" x 18" (47EVT)	$ 1,575.00
ICO-24	C - 72 PASS	Luggage	Right Center 114" x 24" x 18" (47EVV)	$ 1,575.00
ICO-25	C - 72 PASS	Luggage	Right Rear 44" x 20" x 18" (47GAH)	$ 840.00

AIR CONDITIONING

Option Number	Bus Type Available	Option Type	Extended Description	Price
ICO-26	C - Diesel	A/C	78,000 BTU for 34 pass size (48DNV)	$ 10,284.00
ICO-27	C - Diesel	A/C	120,000 BTU for 52 thru 72 pass size (48GZW)	$ 11,631.00
ICO-28	C - Electric	A/C	120,000 BTU for 52 thru 72 pass size (48HEP)	$ 26,090.00
ICO-29	C - Diesel	A/C	Roof Monted A/C Condensers (add to price above) (48CXJ)	$ 2,133.00

TIRES

BLUEGRASS INTERNATIONAL
TRUCK • BUS • RV

Option Number	Bus Type Available	Option Type	Extended Description	Price
ICO-30	C	Tires	Michelin 14 ply (7702498217)	**Standard**
ICO-31	C	Tires	Goodyear 14 ply (7702498132)	$ 99.00
ICO-32	C	Tires	Michelin 16 ply (7762498216)	$ 750.00
ICO-33	C	Tires	Goodyear 16 ply (7762498131)	$ 223.00
ICO-34	C	Tires	Continental 16 ply (7792495439)	$ 97.00

FUEL TANK

Option Number	Bus Type Available	Option Type	Extended Description	Price
ICO-35	C Diesel - (66 or 72	Fuel Tank	100 gallon diesel fuel tank instead of 65 gallon tank (15TAM)	$705

BLUEGRASS INTERNATIONAL
TRUCK • BUS • RV

WARRANTY

Option Number	Bus Type Available	Option Type	Extended Description	Price
ICO-36	C	Warranty	Extended Tow Warranty - 5 yrs/unlimited miles ($550 max per incident) - N/A for ELECTRIC BUS (40RAM)	$ 2,000.00
ICO-37	C	Warranty	Extended Tow Warranty - 5 yrs/unlimited miles ($1100 max per incident) - N/A for ELECTRIC BUS (40YEW)	$ 2,500.00
ICO-38	C	Warranty	5 year/unlimited miles Cummins Engine + Aftertreatment (40ZBR)	$ 4,000.00
ICO-39	C	Warranty	10 year/unlimited miles Cummins Engine + Aftertreatment (40ZBX)	$ 9,975.00

SEATING

Option Number	Bus Type Available	Option Type	Extended Description	Price
ICO-40	C	Seats	U.C.R.A. added to seat (per seat)	$ 86.00
ICO-41	C	Seats	39" IMMI Child Restraint Seat instead of 39" regular seat (per seat)	$ 878.00
ICO-42	C	Seats	39" seat with 3-point seatbelts (per seat)	$ 610.00
ICO-43	C	S/N	30" Track-mounted seat with 3 point belts (per seat)	$ 1,255.00
ICO-44	C	S/N	Rear Lift for 52 pass shell instead of front lift (36 + 2 W/C capacity) - add to base 52 Special Needs bus	$ 2,544.00
ICO-45	C	S/N	Delete one Wheelchair Position	$ 394.00
ICO-46	C	S/N	Add One Wheelchair Position	$ 734.00
ICO-47	C	S/N	Rear Lift for 66 pass shell instead of front lift (45 + 3 W/C capacity) - add to base 66 Special Needs bus	$ 1,378.00
ICO-48	C	S/N	30" IMMI Child Rfestraint seat with 3 pt belts instead of 30" with 3 pt belts only	$ 1,329.00
ICO-49	C	S/N	30" Track Mounted Barrier	$ 447.00

OTHER OPTIONS

Option Number	Bus Type Available	Option Type	Extended Description	Price
ICO-50	C	Adjustable Pedals	Adjustable Pedals (includes tilt/tele steering column) (16HLH)	$982
ICO-51	C	Brakes	Air Disc Brakes instead of Air Drum Brakes	$1933
ICO-52	C	Collision Mitigation	Bendix Fusion 3.0 (includes camera and front sensor)	$3,702
ICO-53	C	Engine Brake	Engine Brake for Cummins B6.7	$148

OTHER OPTIONS

ICO-54	C - 34 pass	Floor	5/8" Marine Grade plywood subfloor with sealed edges (47SCK)	$1031

BLUEGRASS INTERNATIONAL
TRUCK • BUS • RV

ICO-55	C - 52 pass	Floor	5/8" Marine Grade plywood subfloor with sealed edges (47ANW)	$1144
ICO-56	C - 66/72	Floor	5/8" Marine Grade plywood subfloor with sealed edges (47SUB)	$1281
ICO-57	C	Floor	One-piece floor covering material (48UWV)	$701
ICO-58	C	Interior	Barrier Cover with Pouch (48BDG)	**Standard**
ICO-59	C	Interior	Trash Can in Driver Area (47BMA)	$142
ICO-60	C	Interior	Driver's Dome Light with separate switch (49ESC)	$64
ICO-61	C	Interior	Gray Floor Rubber (48PEW)	$299
ICO-62	C	Mirrors	Rosco Accustyle Mirrors instead of Open View ES (49DNB)	$347
ICO-63	C	Special Needs	Sure-Lok GO-2 Oxygen Cylinder Holder	$427
ICO-64	C	Steering Column	Tilt/Telescopic Steering Column (005710)	$477
ICO-65	C	Tow Hooks	Front Tow Hooks, Two (001570)	$125
ICO-66	C	Tow Hooks	Rear Tow Hooks, Two (01WRP)	$127
ICO-67	C - 34 pass	Windows	Tinted Windows (non-special needs) (48BTV)	$546
ICO-68	C - 52 pass	Windows	Tinted Windows (non-special needs) (48BTX)	$661
ICO-69	C - 66/72	Windows	Tinted Windows (non-special needs) (48BUB)	$767
ICO-70	C	Park Brake	Bendix IntelliPark (04GBL,04WJP)	$500
ICO-71	C	Engine Controls	Cruise Control (12VVN)	$51
ICO-72	C	Air Brake System	Schrader Valve to air up brake system for towing purposes (04WGU)	$69
ICO-73	C	Driver Seat	Sears Atlas II air-ride/heated Premium Driver's Seat (48HDN)	$735

Standard Items for 2027

	C	Headlights	LED Headlights	**Standard**
	C	Dash Cluster	Premium Dash Cluster with 5" color display (16GEG)	**Standard**
	C - Sp.	Wheelchair Lift	Braun 1000 lb. Capacity Wheelchair Lift (49NAJ)	**Standard**
	C	Mirrors	Downlit + Heated Crossview Mirrors (49NBM)	**Standard**
	C	Interior	Power Outlet in Driver's Area	**Standard**

BLUEGRASS INTERNATIONAL
TRUCK • BUS • RV

Contact Name	Title	Mobile Number	Email Address
Mark Cahill	Bus Sales Director	502-370-1275	mcahill@bluegrasstrucks.com
Sam Vinroe	Bus Sales - Account Mgr - West KY	859-983-6015	svinroe@bluegrasstrucks.com
Gary King	Bus Sales - Account Mgr - East KY	502-642-0516	gking@bluegrasstrucks.com

BLUEGRASS INTERNATIONAL
TRUCK • BUS • RV

BODY PLAN

WHEELBASE 170"

PB11000, 19 FT. 11 IN., CAP 14

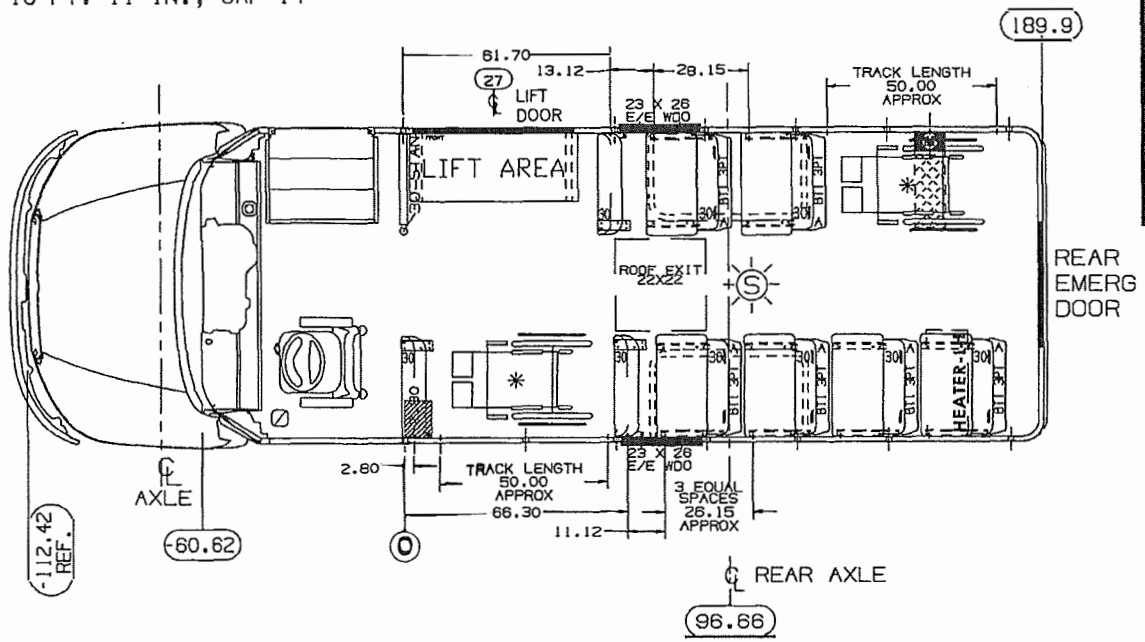

✳ 100" : TOTAL TRACK LENGTH (APPROXIMATELY)

* NOTE:
IT IS THE SELLING DEALER'S RESPONSIBILITY TO ENSURE THAT ANY WHEELCHAIR TIE - DOWN SYSTEM SPECIFIED AND DEPICTED ON THIS DRAWING MEETS ALL DESTINATION STATE SPECIFICATIONS AND TO ALSO ENSURE THAT THE WHEELCHAIRS CAN BE PLACED AND REMOVED WITH RESPECT TO: SEATS, K/O's, SIDE EMERG DOORS, HEATERS, LIFTS, WHEELHOUSES, ETC..
POSSESSION OF THIS PRINT DOES NOT IN ANY WAY OBLIGATE IC CORP. TO BUILD THE UNIT SHOWN.
WC TRACK SHOWN IS FOR REFERENCE ONLY.

THIS UNIT CONFORMS TO APPLICABLE FMVSS

THIS DOCUMENT IS IN ACCORDANCE WITH ASME Y14.5M-1994 AS AMENDED BY THE INTERNATIONAL TRUCK DIVISION DIMENSIONING AND TOLERANCING ADDENDUM-2000.

AT A GLANCE

Engine - Cummins
Fuel Type- Diesel
HP- 220
Trans - 2500 PTS
Size - 19'11"
Capacity - 14
Wheelbase - 170
Item # - IC - 01

50000/49000 REVISE ONLY ON LEGACY SYSTEM

INTERNATIONAL TRUCK AND ENGINE CORPORATION
INTERNATIONAL® CONFIDENTIAL PROPRIETARY

BODY PLAN PB11000

UOOMACH
23FEB23

BLUE-196

BLUEGRASS INTERNATIONAL
TRUCK • BUS • RV

AT A GLANCE

Engine - Cummins
Fuel Type - Diesel
HP - 220 or 250
Trans - 2500 PTS
Size 26' 8"
Capacity- 20
Wheelbase- 218
Item # IC-02, IC-03

BODY PLAN

WHEELBASE 218"

PB11000, 26 FT. 8 IN., CAP 20

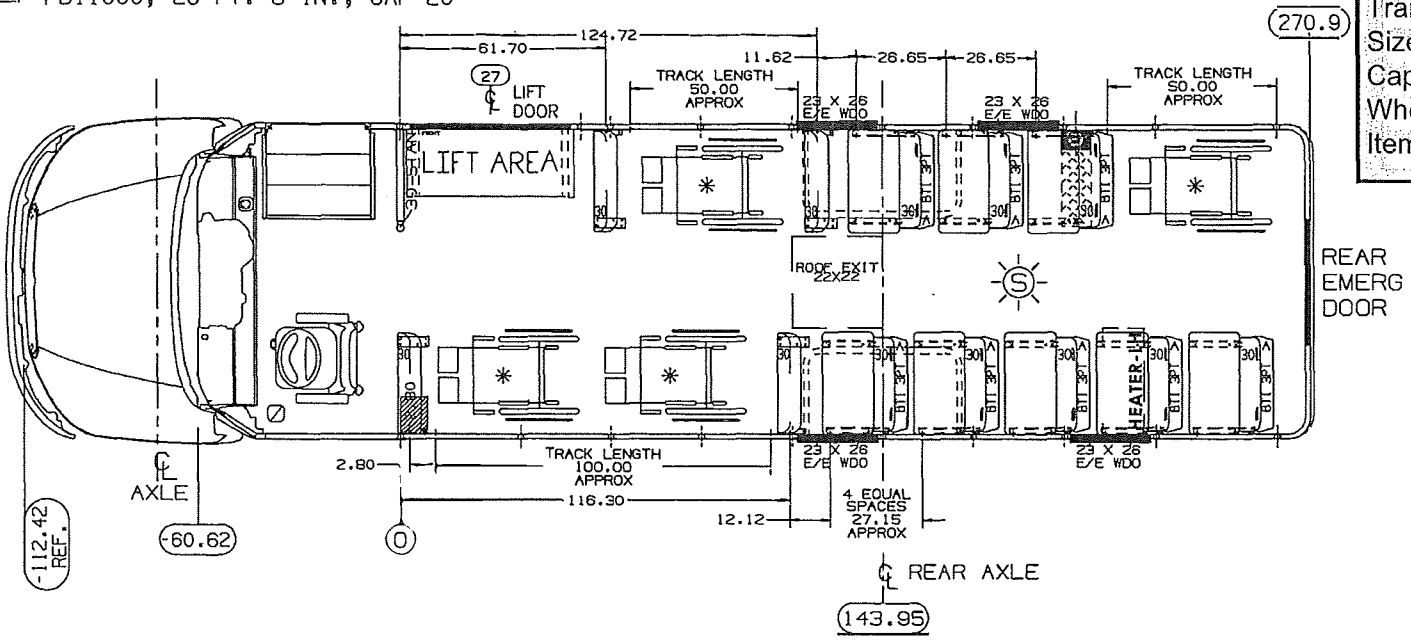

✳ 200": TOTAL TRACK LENGTH (APPROXIMATELY)

• NOTE:
IT IS THE SELLING DEALER'S RESPONSIBILITY TO ENSURE THAT ANY WHEELCHAIR TIE-DOWN SYSTEM SPECIFIED AND DEPICTED ON THIS DRAWING MEETS ALL DESTINATION STATE SPECIFICATIONS AND TO ALSO ENSURE THAT THE WHEELCHAIRS CAN BE PLACED AND REMOVED WITH RESPECT TO: SEATS, E/E's, SIDE EMERGENCY DOORS, HEATERS, LIFTS, WHEELHOUSES, ETC.
POSSESSION OF THIS PRINT DOES NOT IN ANY WAY OBLIGATE IC CORP. TO BUILD THE UNIT SHOWN. WC TRACK SHOWN IS FOR REFERENCE ONLY.

THIS UNIT CONFORMS TO APPLICABLE FMVSS

THIS DOCUMENT IS IN ACCORDANCE WITH ASME Y14.5M-1994 AS AMENDED BY THE INTERNATIONAL TRUCK DIVISION DIMENSIONING AND TOLERANCING ADDENDUM-2000.

50000/49000

REVISE ONLY ON UGRAF SYSTEM

INTERNATIONAL TRUCK AND ENGINE CORPORATION
INTERNATIONAL CONFIDENTIAL PROPRIETARY

REFERENCE DJ0140A000
LINEAR MEASURE: mm ☐ in ☒
APPROX. MASS (WEIGHT): ROUGH PART FINISH PART
ONE PLACE (.X) ±1.0 ±.08
TWO PLACE (.XX) ±0.8 ±.03
THREE PLACE (.XXX) ±0.25 ±.010
ANGLES ±1°
THIRD ANGLE PROJECTION
INTERNAL CONTROL
NAME BODY PLAN PB11000
CONTROL E 50
NAME FINANCIATION
VERSION E
DRAWN UOOMACH
MATERIAL
APPROVED
DATE 23FEB23
SCALE NONE
SIZE 4
PART NO. BLUE-194
SHEET 01
RELEASE NO.

BLUEGRASS INTERNATIONAL
TRUCK • BUS • RV

AT A GLANCE

Engine - Cummins
Fuel Type - Diesel
HP - 220 or 250
Trans - 2500 PTS or 3000 PTS
Size - 33'5"
Capacity - 30
Wheelbase - 276
Item # - IC-04, IC-05, IC-06, IC- 07

BODY PLAN

WHEELBASE 276"

PB11000, 33 FT. 5 IN., CAP 30

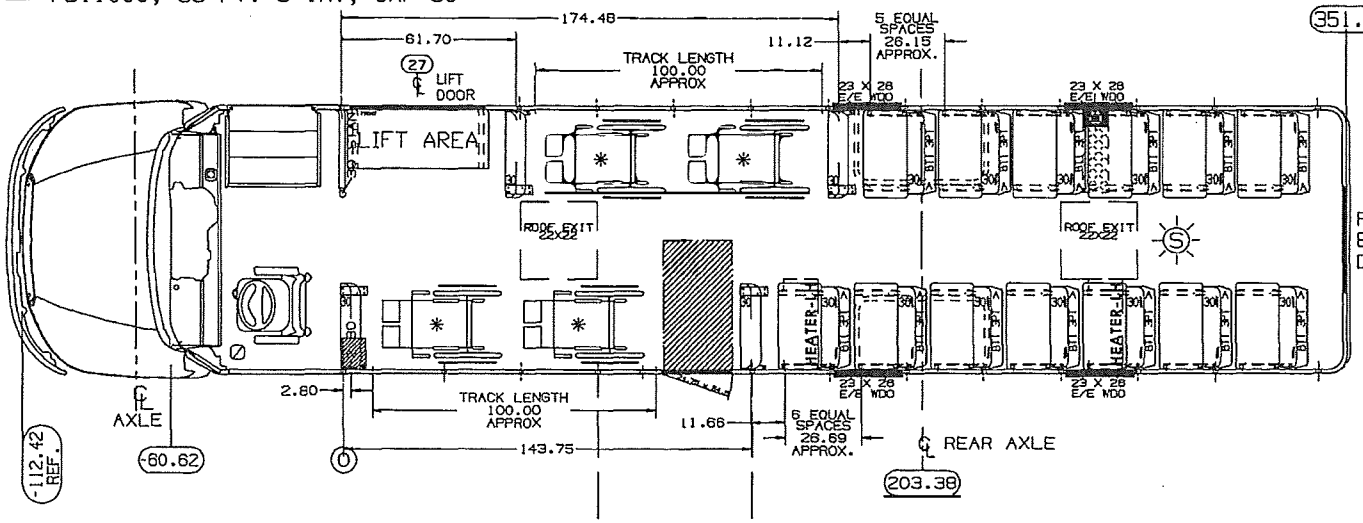

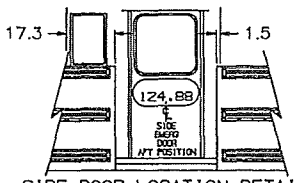

SIDE DOOR LOCATION DETAIL

✳ 200" : TOTAL TRACK LENGTH (APPROXIMATELY)

* NOTE:
IT IS THE SELLING DEALER'S RESPONSIBILITY TO ENSURE THAT ANY WHEELCHAIR TIE - DOWN SYSTEM SPECIFIED AND DEPICTED ON THIS DRAWING MEETS ALL DESTINATION STATE SPECIFICATIONS AND TO ALSO ENSURE THAT THE WHEELCHAIRS CAN BE PLACED AND REMOVED WITH RESPECT TO: SEATS, K/O's, SIDE EMERG DOORS, HEATERS, LIFTS, WHEELHOUSES, ETC..
POSSESSION OF THIS PRINT DOES NOT IN any WAY OBLIGATE IC CORP. TO BUILD THE UNIT SHOWN.
WC TRACK SHOWN IS FOR REFERENCE ONLY.

THIS UNIT CONFORMS TO APPLICABLE FMVSS

THIS DRAWING IS IN ACCORDANCE WITH ASME Y14.5M-1994 AS AMENDED BY THE INTERNATIONAL TRUCK DIVISION DIMENSIONING AND TOLERANCING ADDENDUM-2000.

50000/49000 REVISE ONLY ON CCRS SYSTEM

INTERNATIONAL TRUCK AND ENGINE CORPORATION
INTERNATIONAL® CONFIDENTIAL PROPRIETARY

REFERENCE	DJ0238A001
LINEAR MEASURE: MM ☐ IN ☒	APPROX. MASS (WEIGHT) ROUGH PART / FINISH PART
UNLESS SPECIFIED otherwise TOLERANCES ARE	mm / in
ONE PLACE (.X)	±1.0 / ±.09
TWO PLACE (.XX)	±0.8 / ±.03
THREE PLACE (.XXX)	±0.25 / ±.010
ANGLES	±1°
THIRD ANGLE PROJECTION	INTERNAL CONTROL
BASE	BODY PLAN PB11000
CONTROL	E 50
WORK ORDER	E
DRAWN	U00MACH
DATE	23FEB23
CHECKED	
DATE	
APPROVED	
DATE	
RELEASE NO.	
MATERIAL	
FINISH	
PART TYPE CODE	
SCALE	NONE
SIZE	4
PART NO.	BLUE-195
SHEET	01

BLUEGRASS INTERNATIONAL
TRUCK • BUS • RV

BODY PLAN

WHEELBASE 170"

PB11000, 19 FT. 11 IN., CAP 34

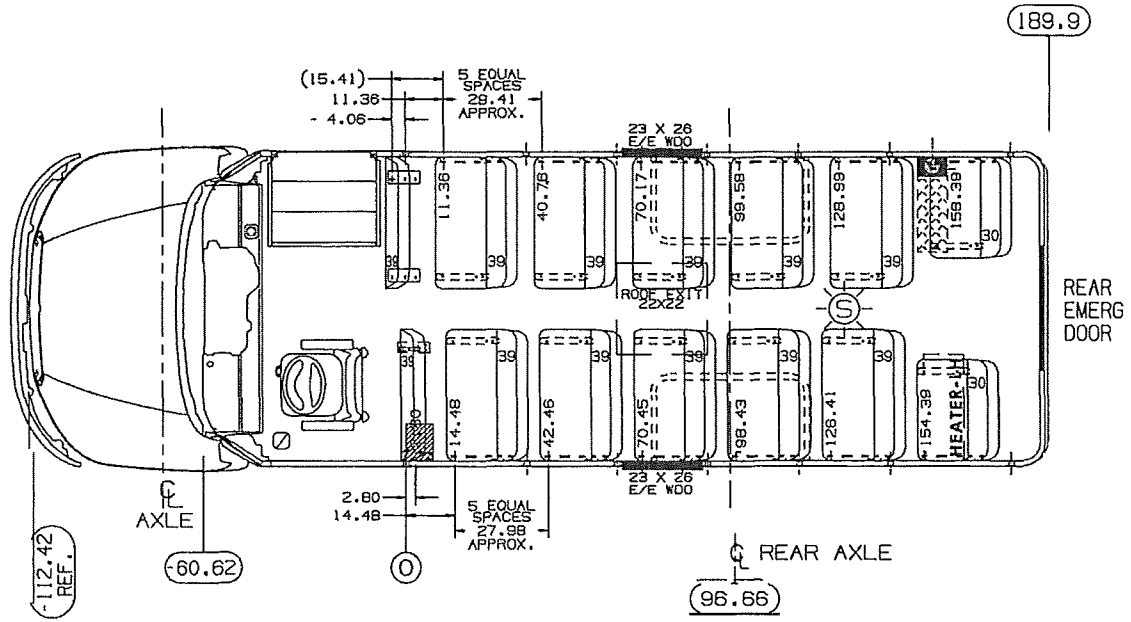

AT A GLANCE

Engine - Cummins
Fuel Type - Diesel
HP- 220
Trans - 2500 PTS
Size 19' 11"
Capacity - 34
Wheelbase - 170
Item # - IC-08

INTERNATIONAL TRUCK AND ENGINE CORPORATION
INTERNATIONAL CONFIDENTIAL PROPRIETARY

BODY PLAN PB11000

U02A557
120CT23

BLUE-214

THIS UNIT CONFORMS TO APPLICABLE FMVSS

BLUEGRASS INTERNATIONAL
TRUCK • BUS • RV

AT A GLANCE

Engine - Cummins
Fuel Type- Diesel
HP 220 or 250
Trans - 2500 PTS
Size 26'8"
Capacity -52
Wheelbase- 218
Item # IC-09 or IC-10

BODY PLAN

WHEELBASE 218"

PB11000, 26 FT. 8 IN., CAP 52

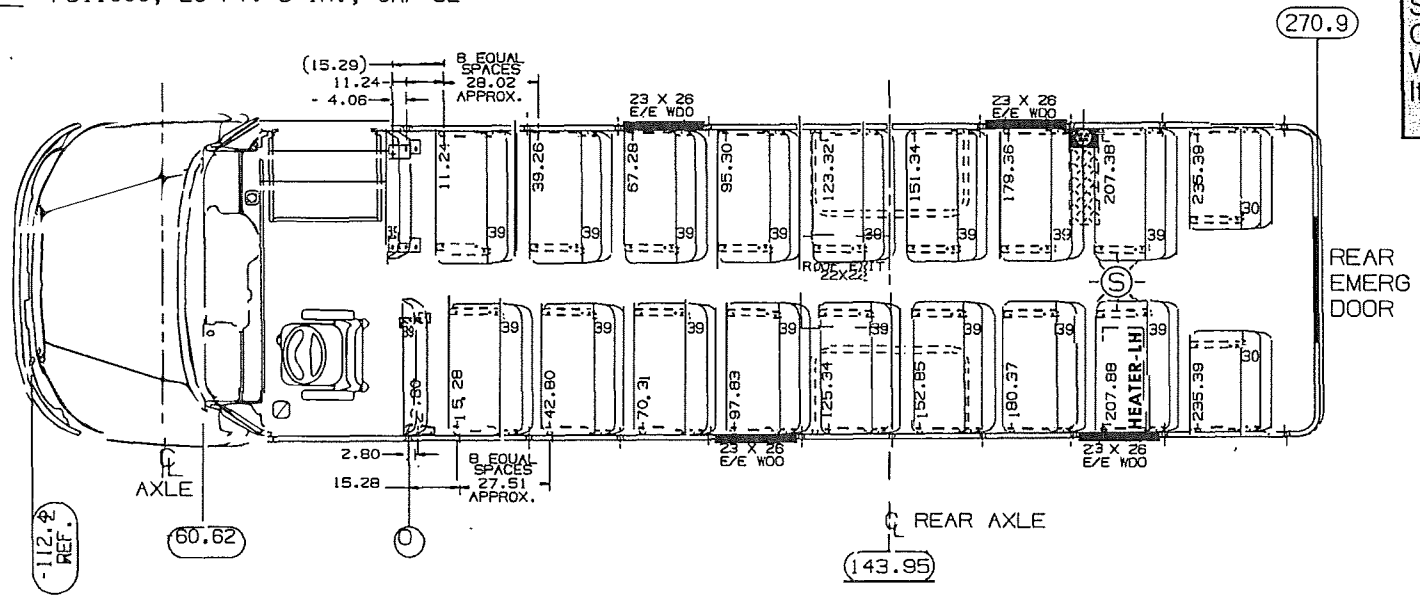

INTERNATIONAL TRUCK AND ENGINE CORPORATION
INTERNATIONAL CONFIDENTIAL PROPRIETARY

REFERENCE DX0166A001
LINEAR MEASURE: mm in
APPROX. MASS (WEIGHT) ROUGH PART FINISH PART
ONE PLACE (.X) ±1.5 ±.06
TWO PLACE (.XX) ±0.8 ±.03
THREE PLACE (.XXX) ±0.25 ±.010
ANGLES ±1°
BODY PLAN PB11000
E 50
E
U02A558
06SEP22
NONE
4
01
DM0047A001

50ZBM/49001

REVISE ONLY ON UGRF SYSTEM

THIS UNIT CONFORMS TO APPLICABLE FMVSS

THIS DOCUMENT IS IN ACCORDANCE WITH ASME Y14.5M-1994 AS AMENDED BY THE INTERNATIONAL TRUCK DIVISION DIMENSIONING AND TOLERANCING ADDENDUM-2000.

BLUEGRASS INTERNATIONAL
TRUCK • BUS • RV

AT A GLANCE

Engine - Cummins
Fuel Type - Diesel
HP - 220 or 250
Trans- 2500 PTS or 3000PTS
Size 32' 8"
Capacity - 66
Wheelbase 276
Item # IC-11, IC-12, IC-15, IC-16

BODY PLAN

WHEELBASE 276"

PB11000, 32 FT. 8 IN., PLUS 9 RR., CAP 66

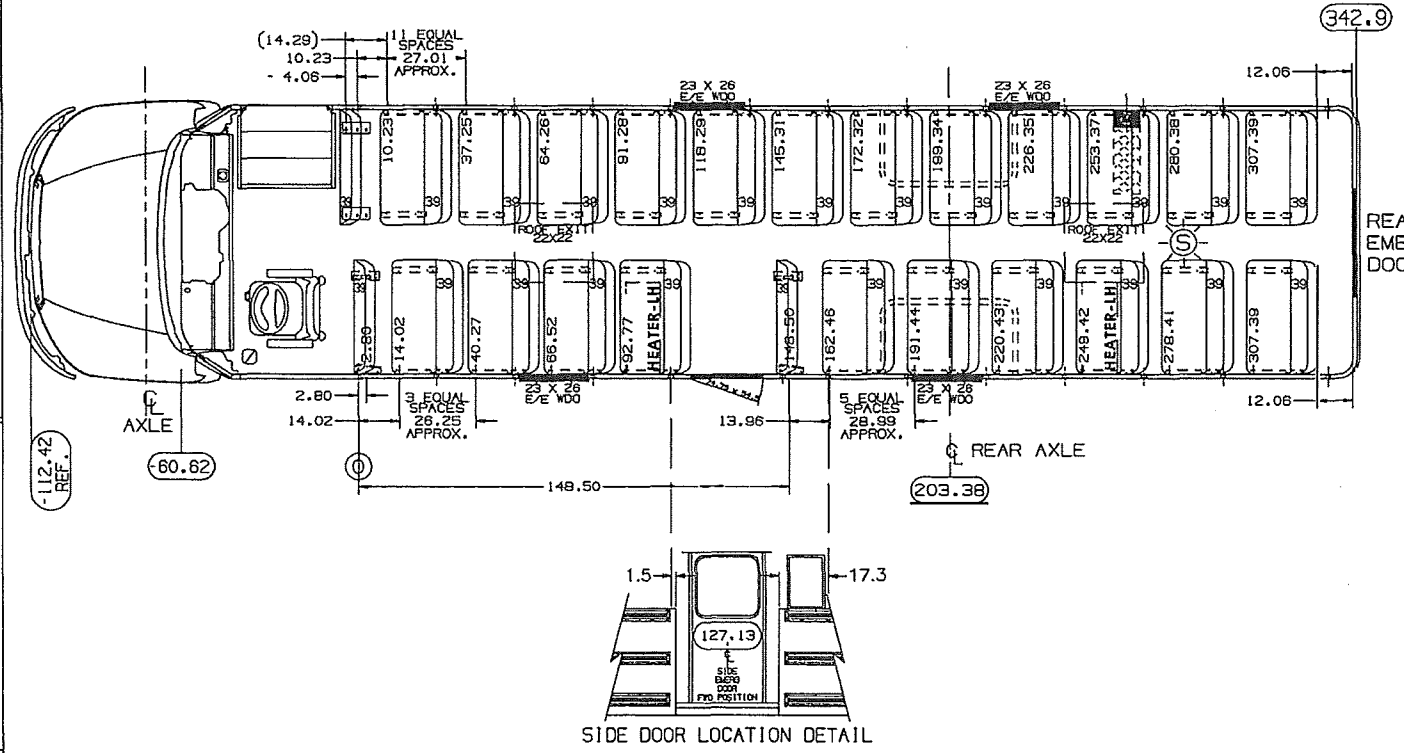

INTERNATIONAL TRUCK AND ENGINE CORPORATION
INTERNATIONAL® CONFIDENTIAL PROPRIETARY

REFERENCE DX0028A000/DM0111A000
LINEAR MEASURE: mm ☐ in ☒
APPROX. MASS (WEIGHT) ROUGH PART FINISH PART
ONE PLACE (.X) ±1.5 ±.06
TWO PLACE (.XX) ±0.8 ±.03
THREE PLACE (.XXX) ±0.25 ±.010
ANGLES ±1°
INTERNAL CONTROL
BODY PLAN PB11000
E 50
E
UOOMACH
23FEB23
NONE
4
BLUE-193
01

50000/49000
REVISE ONLY ON URPAF SYSTEM

THIS UNIT CONFORMS TO APPLICABLE FMVSS

BLUEGRASS INTERNATIONAL
TRUCK • BUS • RV

AT A GLANCE

Engine - Cummins
Fuel Type Diesel
HP - 220 or 250
Trans- 2500 PTS or 3000PTS Size 34 2"
Capacity - 72
Wheelbase 276
Item # IC-13, IC-14, IC-17, IC-18

BODY PLAN

WHEELBASE 276"

PB11000, 34 FT. 2 IN., CAP 72

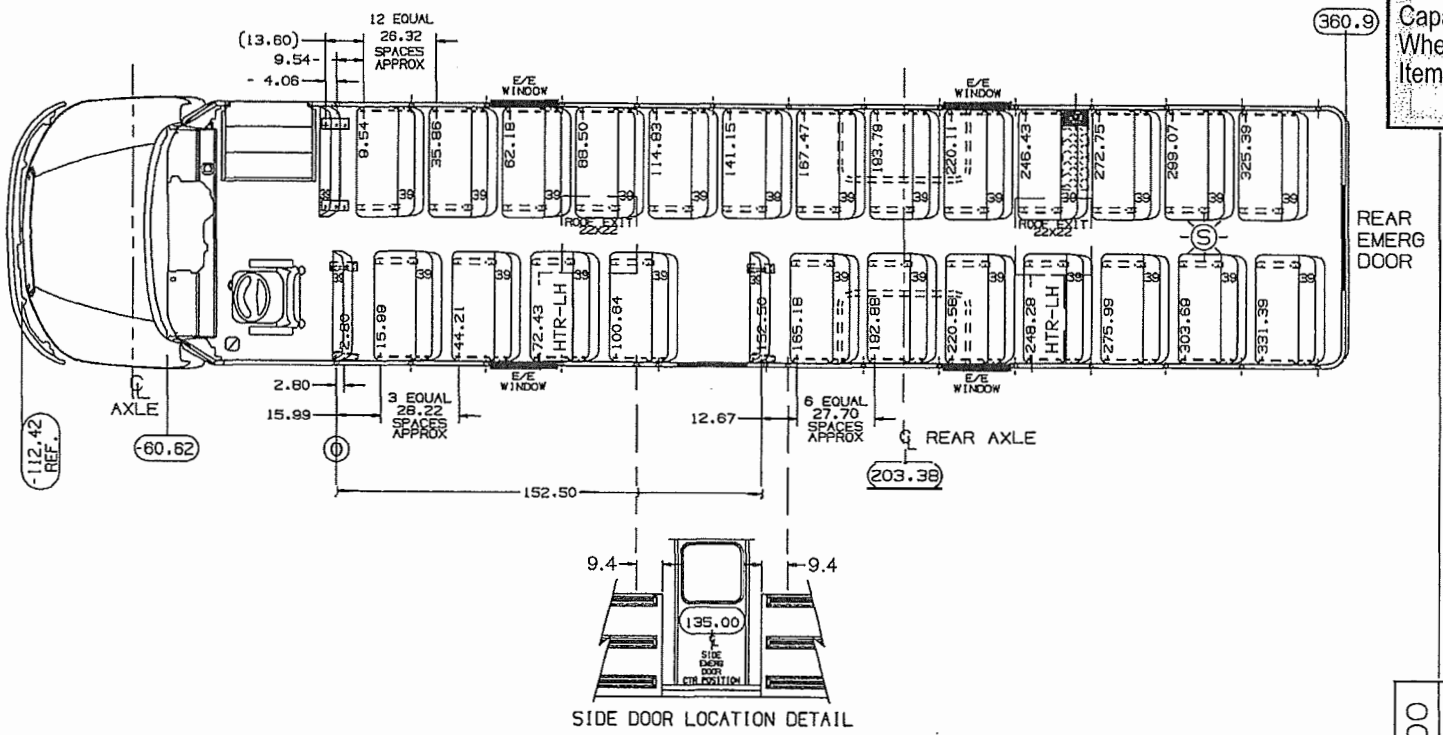

SIDE DOOR LOCATION DETAIL

INTERNATIONAL TRUCK AND ENGINE CORPORATION
INTERNATIONAL CONFIDENTIAL PROPRIETARY

REFERENCE DM0110A000

LINEAR MEASURE: mm ☐ in ☒
APPROX. MASS (WEIGHT) ROUGH PART FINISH PART

BODY PLAN PB11000

E 50

U02A559

24OCT22

BLUE-189

THIS UNIT CONFORMS TO APPLICABLE FMVSS

50000/49000

REVISE ONLY ON UPRF SYSTEM

BLUEGRASS INTERNATIONAL
TRUCK • BUS • RV

AT A GLANCE

Engine - Electric
Fuel Type - Battery
HP - 342
Size 26' 8"
Capacity - 52
Wheelbase 218
Item # IC-19

BODY PLAN

WHEELBASE 218"

PB10E00, 26 FT. 8 IN., CAP 52

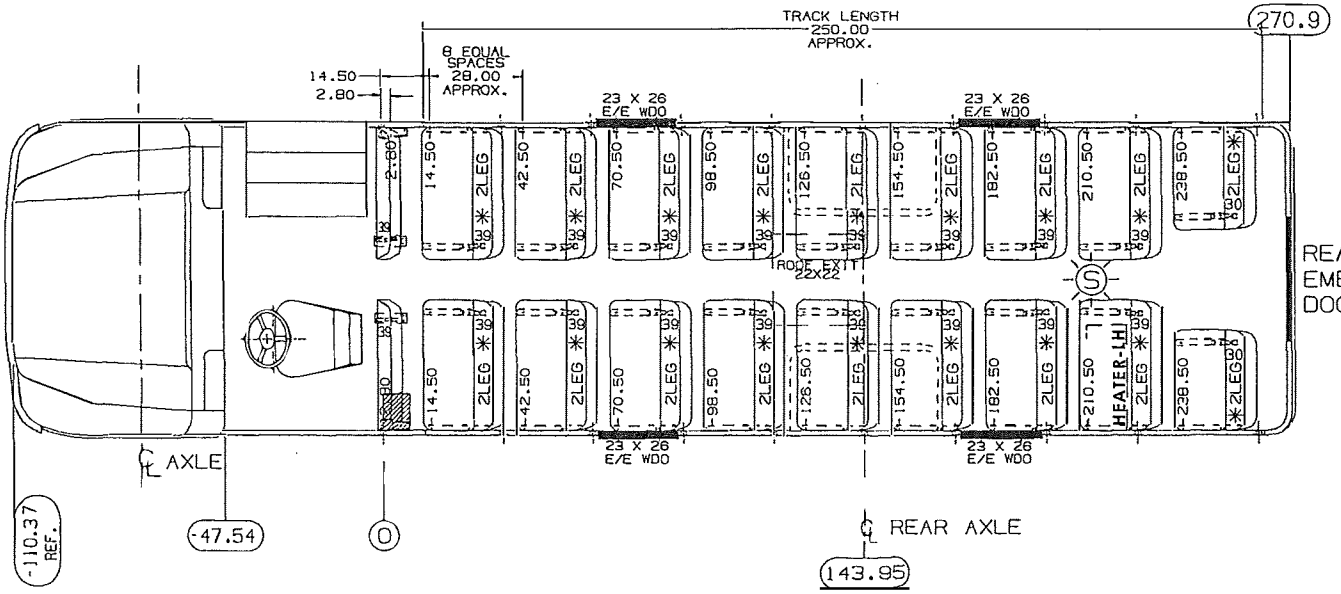

500": TOTAL TRACK LENGTH (APPROXIMATELY)

INTERNATIONAL TRUCK AND ENGINE CORPORATION
INTERNATIONAL CONFIDENTIAL PROPRIETARY

50000/49000

REVISE ONLY ON UGRAF SYSTEM

REFERENCE 000

LINEAR MEASURE: mm in

APPROX. MASS (WEIGHT): ROUGH PART, FINISH PART

BODY PLAN PB10E00

E 50

E

U02A557

170CT23

NONE

4

BLUE-215

01

THIS UNIT CONFORMS TO APPLICABLE FMVSS

THIS DOCUMENT IS IN ACCORDANCE WITH ASME Y14.5M-1994 AS AMENDED BY THE INTERNATIONAL TRUCK DIVISION DIMENSIONING AND TOLERANCING ADDENDUM-2000.

BLUEGRASS INTERNATIONAL
TRUCK • BUS • RV

BODY PLAN

WHEELBASE 276"

PB10E00, 34 FT. 2 IN., CAP 72

AT A GLANCE

Engine - Electric
Fuel Type - Battery
HP - 342
Size 34 2"
Capacity - 72
Wheelbase 276
Item # IC-20

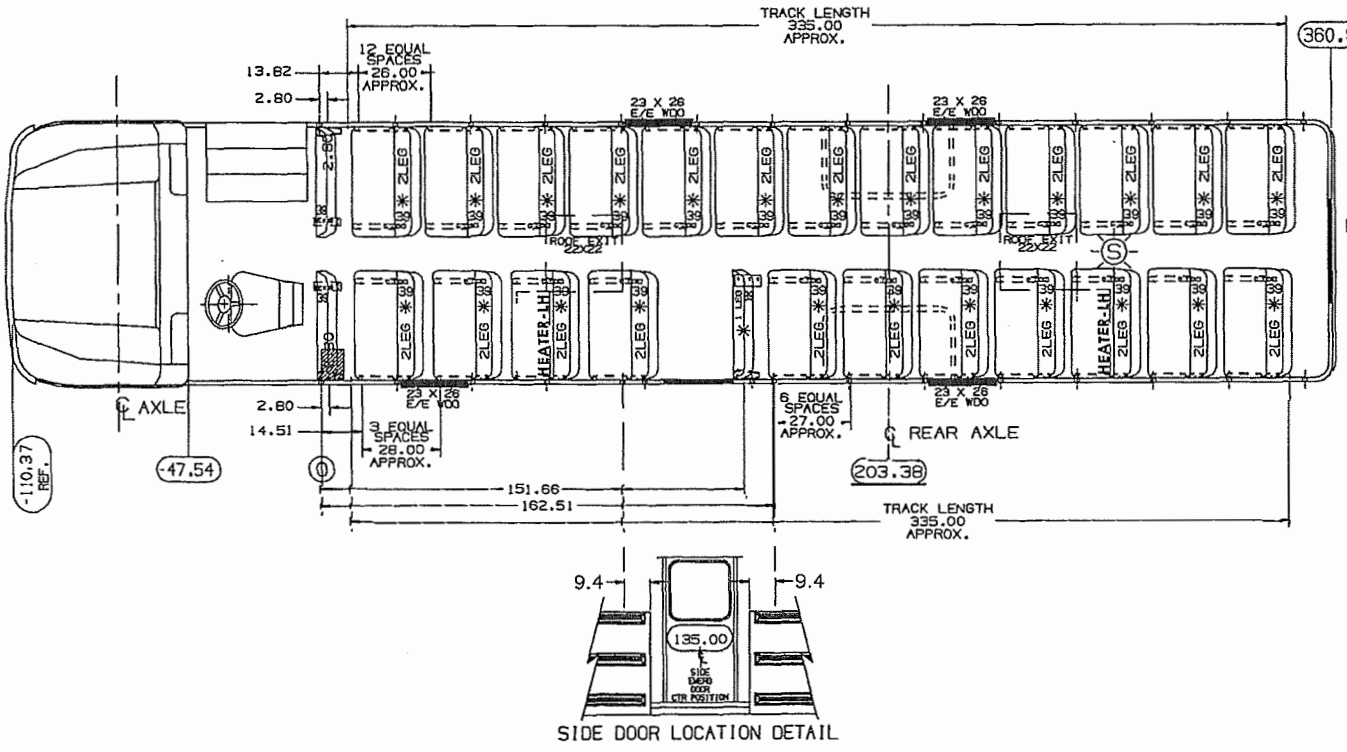

SIDE DOOR LOCATION DETAIL

✳ 670" : TOTAL TRACK LENGTH (APPROXIMATELY)

50000/49000 REVISE ONLY ON CADAF SYSTEM

INTERNATIONAL TRUCK AND ENGINE CORPORATION
INTERNATIONAL CONFIDENTIAL PROPRIETARY

REFERENCE 000
LINEAR MEASURE: mm ☐ in ☒
APPROX. MASS (WEIGHT): ROUGH PART, FINISH PART
BODY PLAN PB10E00
E 50
U02A558
24MAY23
BLUE-205
01

THIS UNIT CONFORMS TO APPLICABLE FMVSS

THIS DOCUMENT IS IN ACCORDANCE WITH ASME Y14.5M-1994 AS AMENDED BY THE INTERNATIONAL TRUCK DIVISION DIMENSIONING AND TOLERANCING ADDENDUM-2000.